Chosen-Ciphertext Attacks

CMSC 28400, Autumn 2019, Lecture 15

David Cash

University of Chicago

Last time: CPAs and Partial Plaintext Recovery

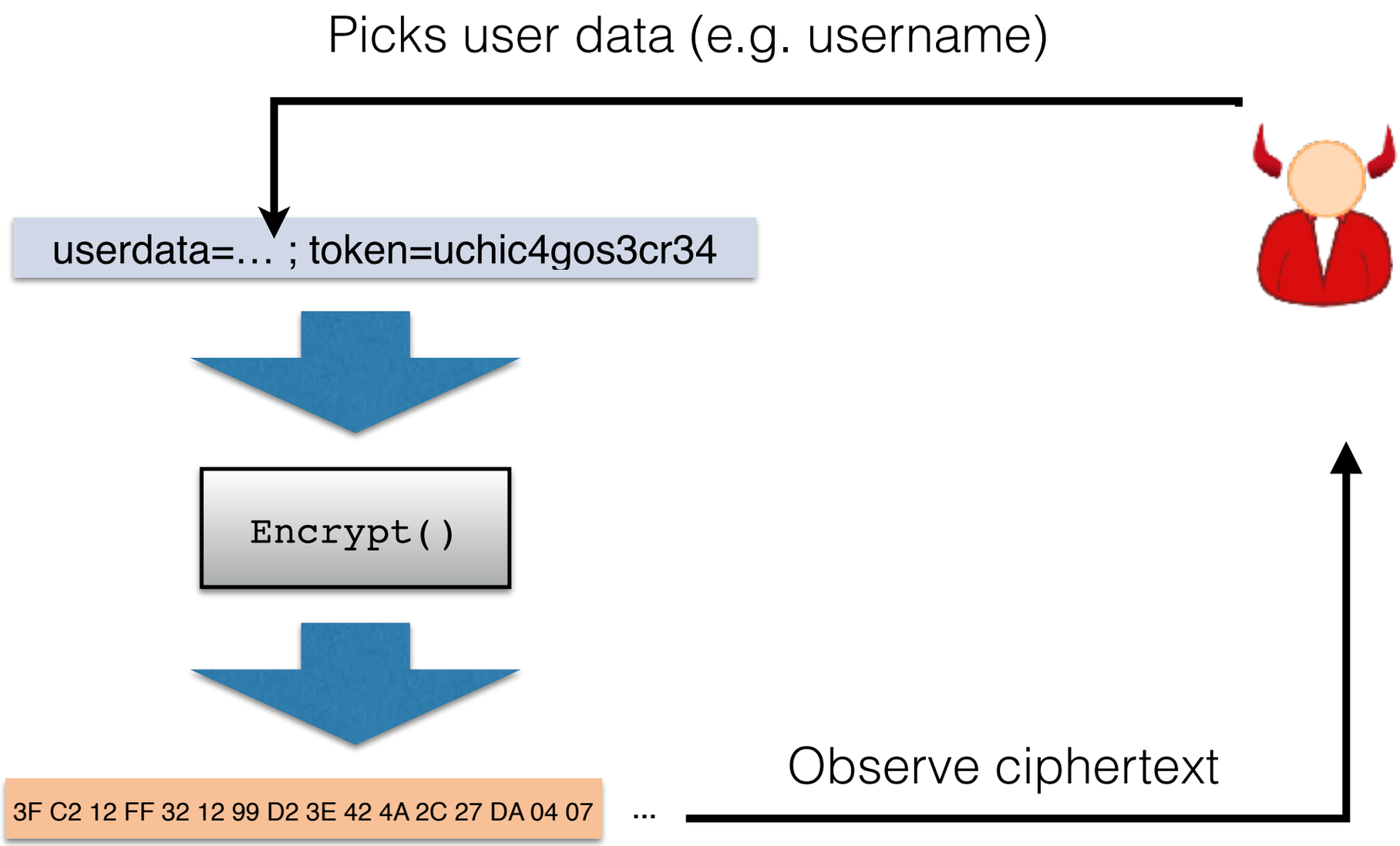

Today: Chosen-Ciphertext Attacks (CCA)

- Adversary submits ciphertexts to system
- System decrypts them and reacts

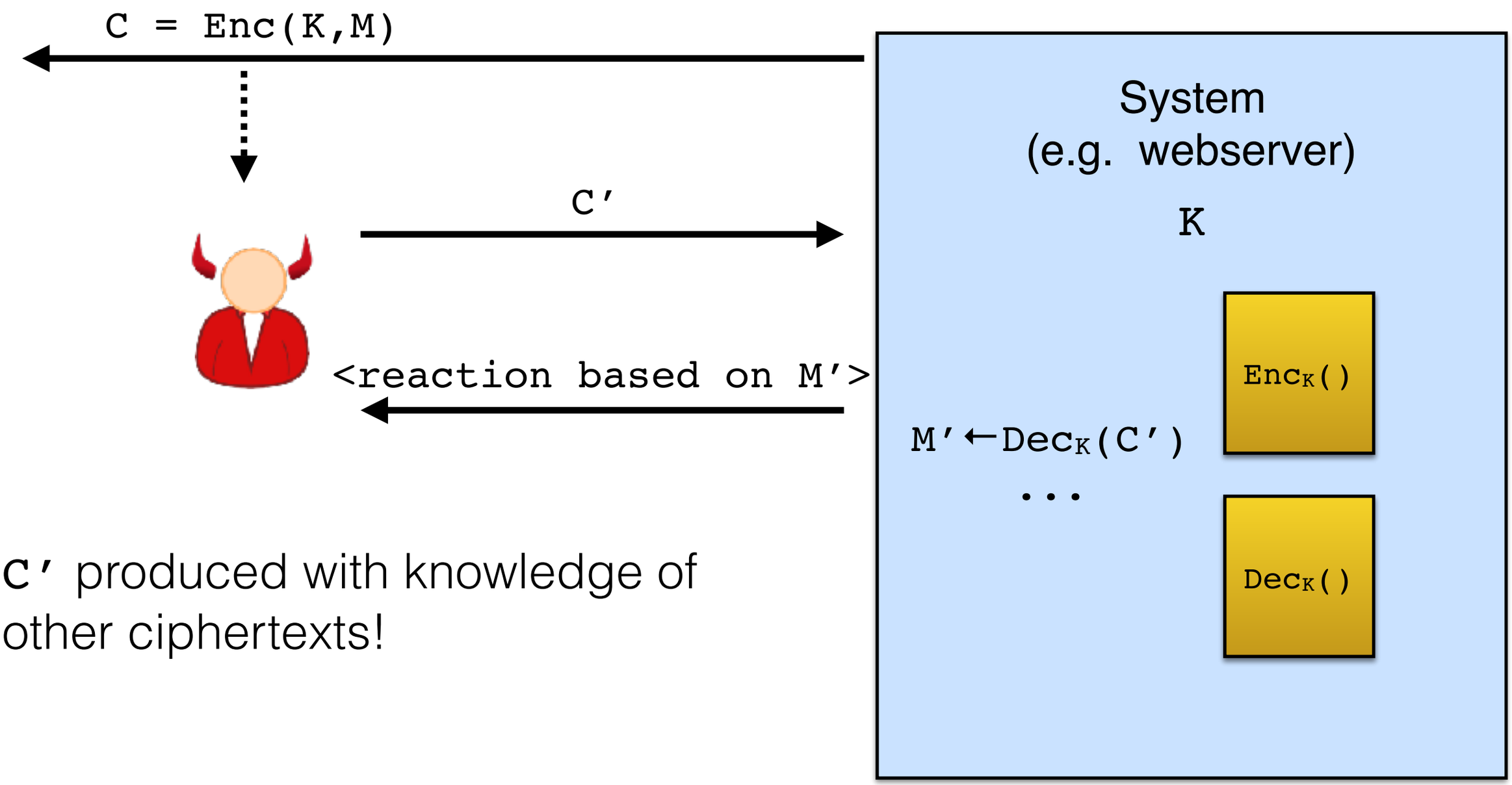

- `C'` produced with knowledge of other ciphertexts!

A Simple CCA: Stream Ciphers and CTR Mode

```
M = please pay ben 20 bucks

C = b0595fafd05df4a7d8a04ced2d1ec800d2daed851ff509b3e446a782871c2d
```

```
C'= b0595fafd05df4a7d8a04ced2d1ec800d2daed851ff509b3e546a782871c2d

M' = please pay ben 21 bucks
```

- Inherent to stream-cipher approach to encryption.
- More subtle problems even with ECB, CBC, etc (PPS2!)

More Advanced CCA Template

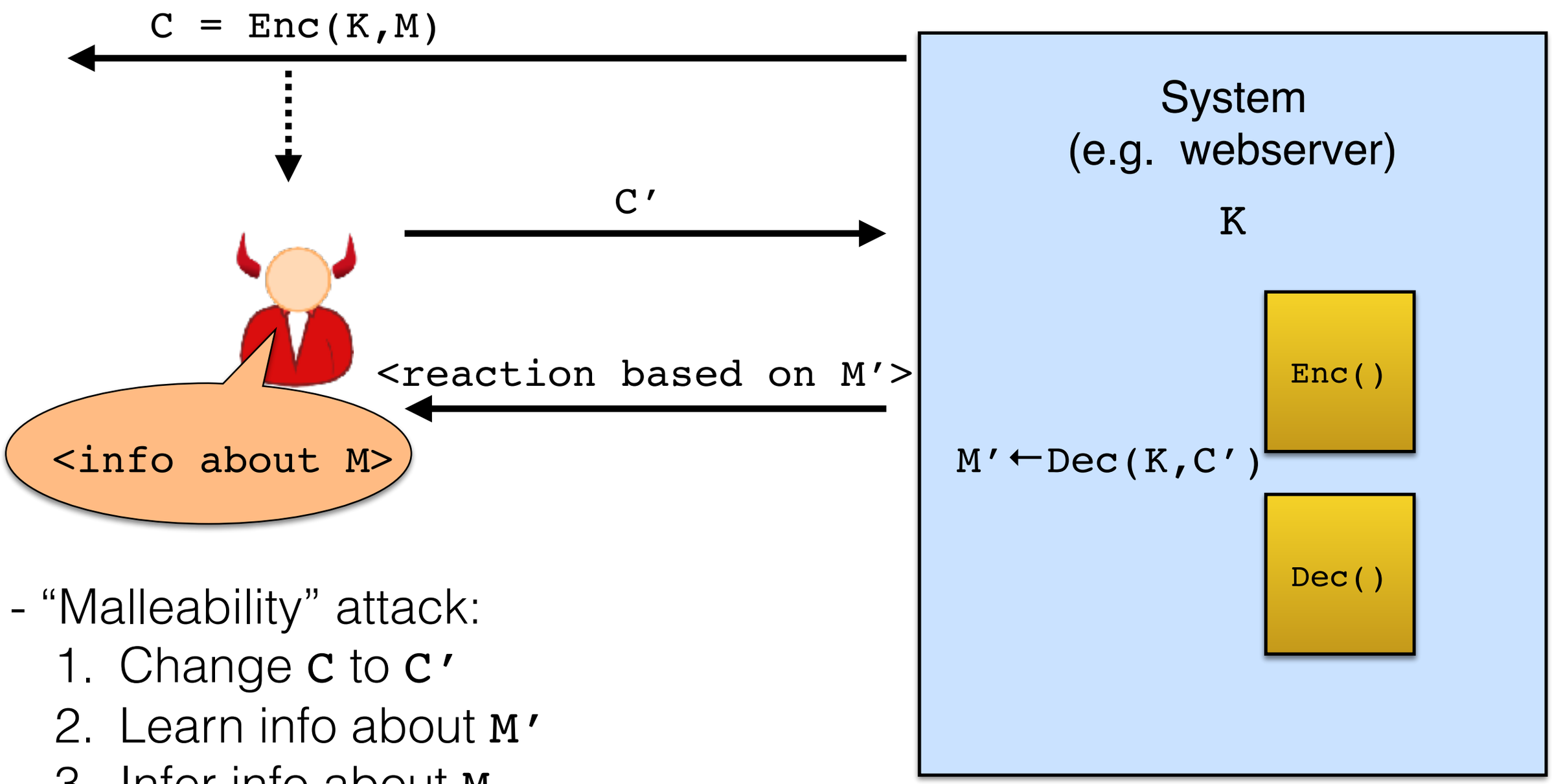

- "Malleability" attack:
  1. Change `C` to `C'`
  2. Learn info about `M'`
  3. Infer info about `M`

Typical Bug: Clear-Reply On Padding-Error

- Sometimes systems return message in clear if padding is invalid

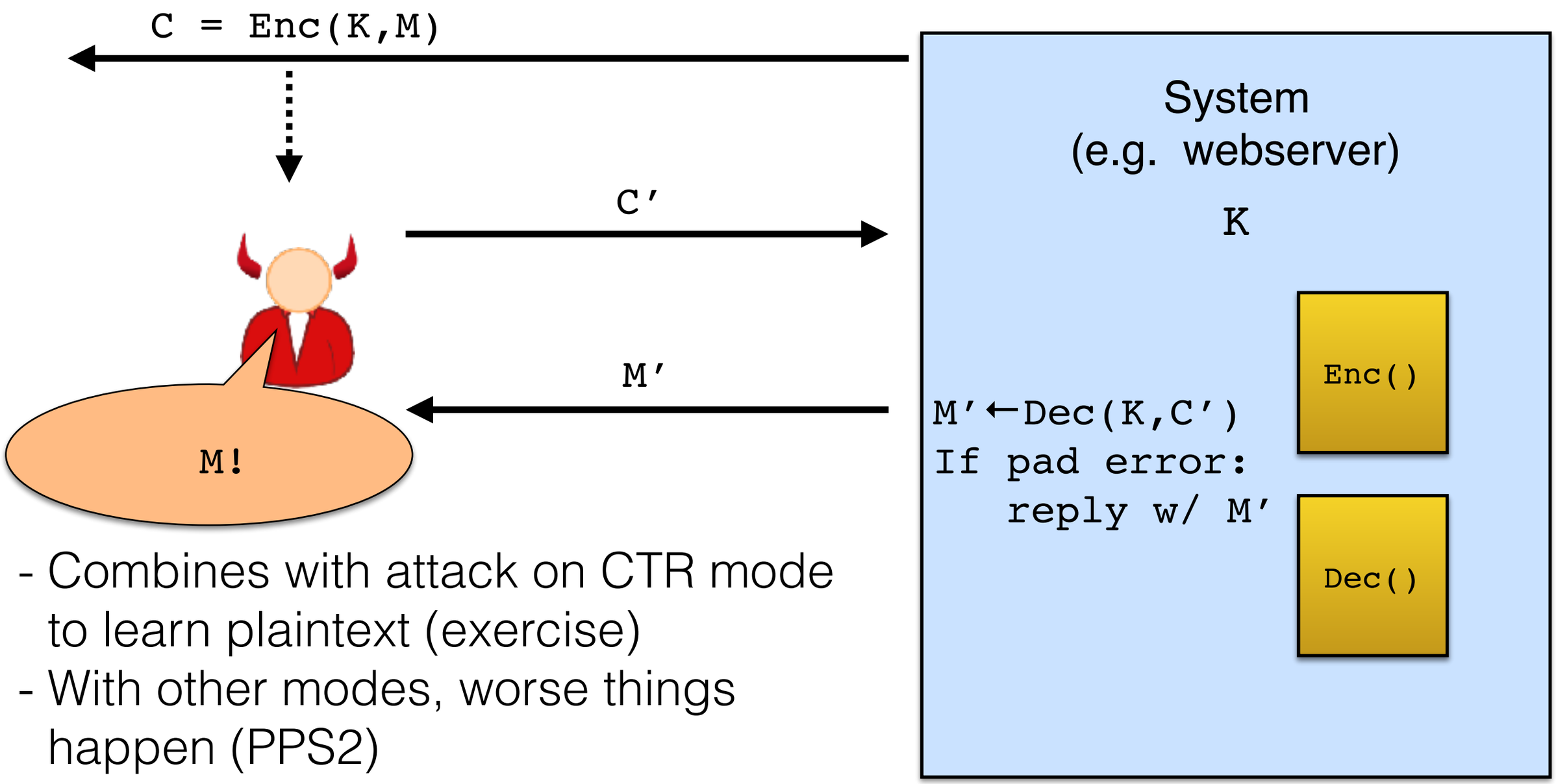

- Combines with attack on CTR mode to learn plaintext (exercise)
- With other modes, worse things happen (PPS2)

Next Attack: On AES-CBC with Padding

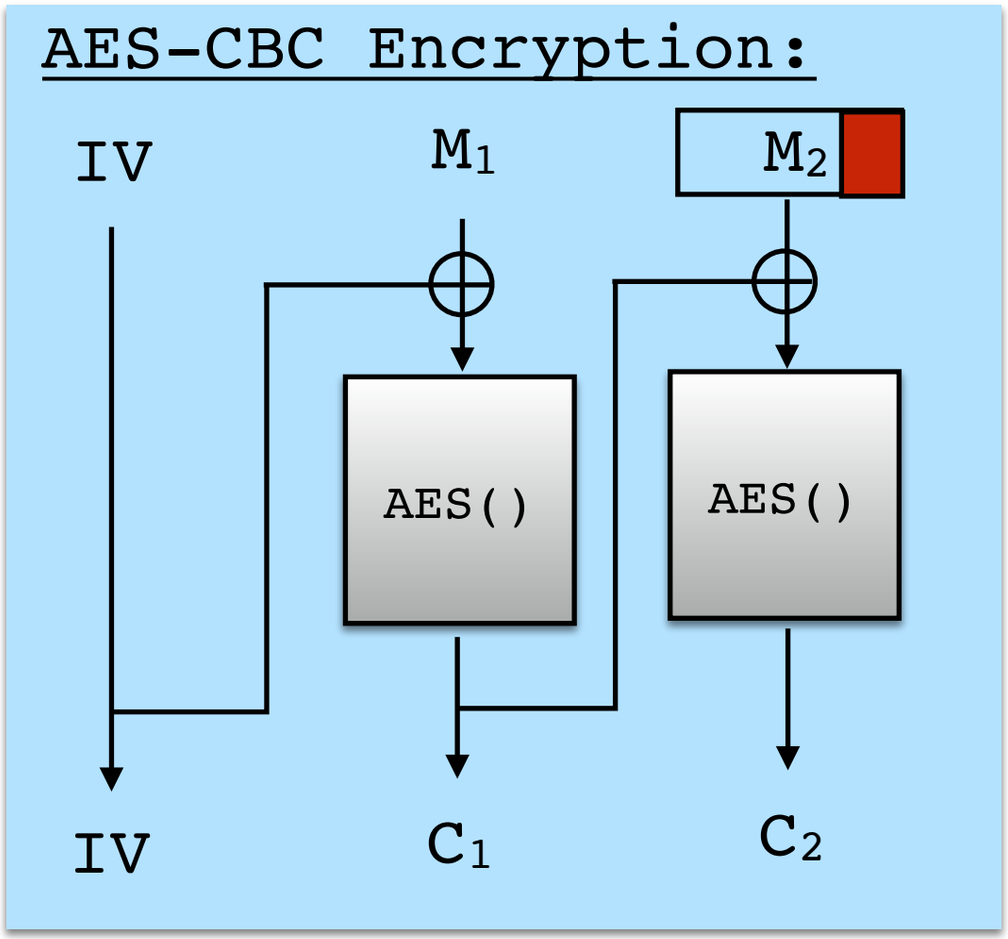

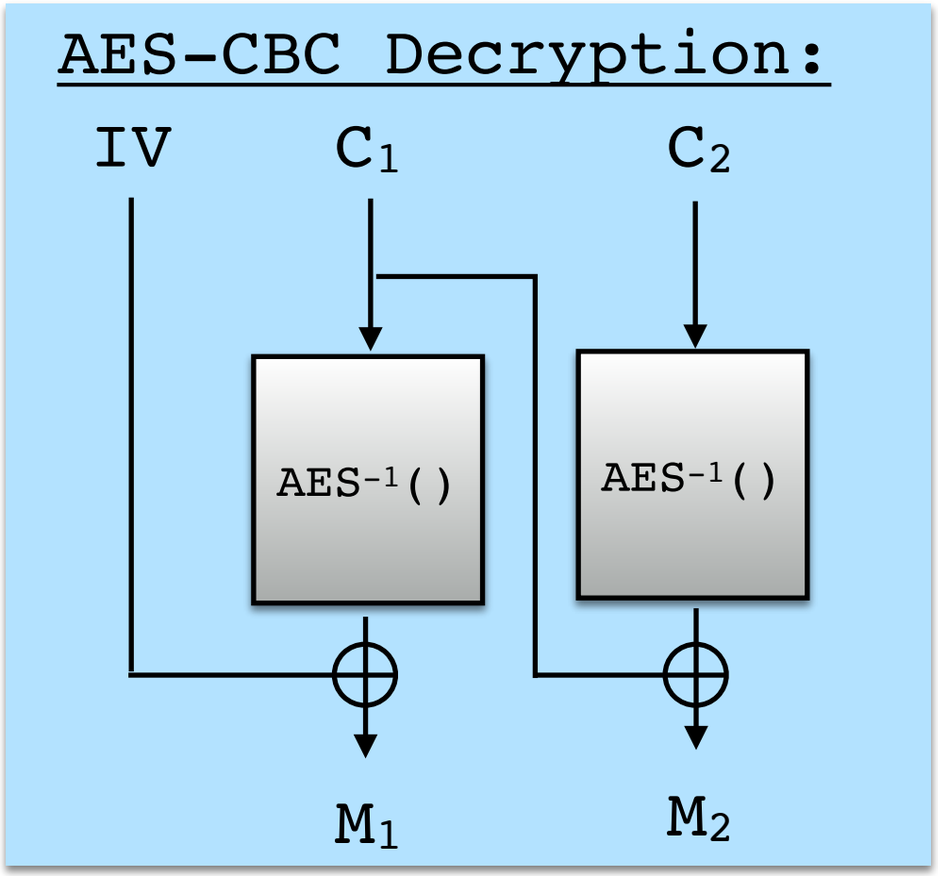

PKCS7 Padding Reminder

- Need to pad a byte string up to a multiple of 16 bytes
- First look at how many bytes are missing. Here, need 10 bytes
- Fill missing k bytes with value k (k = 10 = 0x0A in example)

```
48 65 6C 6C 6F 20 43 53 31 37 37 20 73 74 75 64   65 6E 74 73 21 00   0A 0A 0A 0A 0A 0A 0A 0A 0A 0A
```

- If data is already a multiple of 16 bytes long, add an entire block of 0x10 bytes

```
48 65 6C 6C 6F 20 43 53 31 37 37 20 73 74 02 02   10 10 10 10 10 10 10 10 10 10 10 10 10 10 10 10
```

Can't leave data unchanged;
Bytes might be interpreted as padding.

- Un-padding is easy

Invalid PKCS7 Padding Reminder

Fact: Not every byte string is a “valid padding”. Some strings have to be handled as “malformed”

```
48 65 6C 6C 6F 20 43 53 31 37 37 20 73 74 75 64
```

```
48 65 6C 6C 6F 20 43 53 31 37 37 20 73 74 01 02
```

Invalid. Why?

```
48 65 6C 6C 6F 20 43 53 31 37 37 20 73 74 75 64
```

```
48 65 6C 6C 0A 0A 0A 0A 0A 0A 0A 0A 0A 0A 0A 0A
```

Valid. Why?

```
48 65 6C 6C 6F 20 43 53 31 37 37 20 73 74 75 64
```

```
48 65 6C 6C 0A 0A 0A 0A 0A 0A 0A 0A 0A 0A 0A 01
```

Valid! All strings that end in 0x01 are valid.

Padding Oracle Attack Template

Tell if padding error occurred!

C′ →

← [protocol response]

System
(e.g. webserver)

K

Real-world attacks against:
- TLS (2003)
- IPSec (2007,2010)
- Ruby on Rails (2010)
- ASP.NET (2010)
- SecurID Auth Tokens (2012)
- Steam Client (2016)

```
Decrypt(K,C′)

1. M′←CBC-Decrypt(K,C′)
2. If padding format wrong:
     Output PADDING_ERROR
3. Output M′
```

Now: How to find <u>one byte</u> of plaintext.

Attack Setting

- First two blocks of long valid ciphertext are pictured.

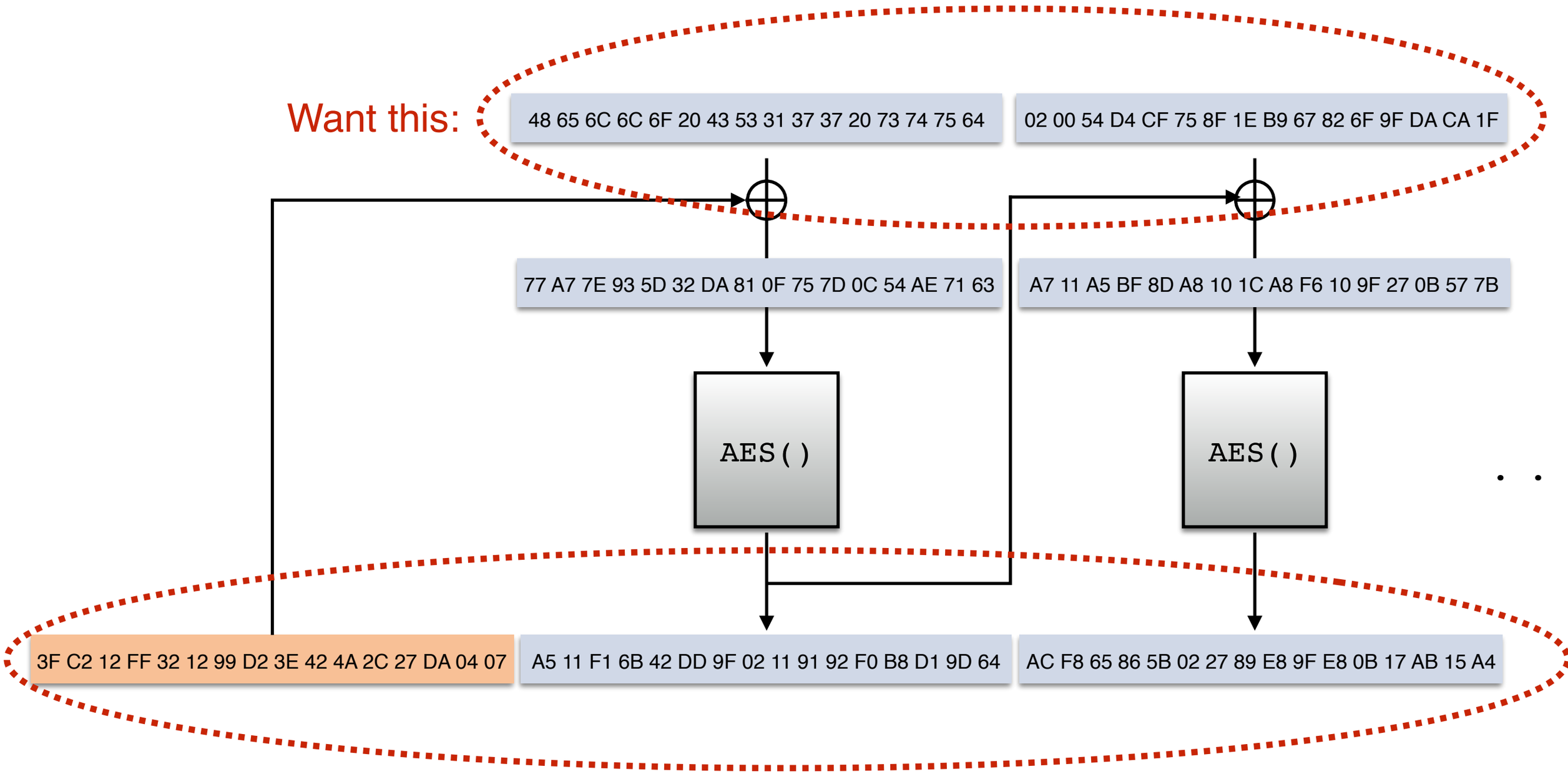

Have this, plus the padding oracle.

Initial goal: Learn last byte of a block

- First observation: If we truncate the long ciphertext down to these blocks, what will padding oracle say?
  - `Padding_Error`!

Let's learn this:

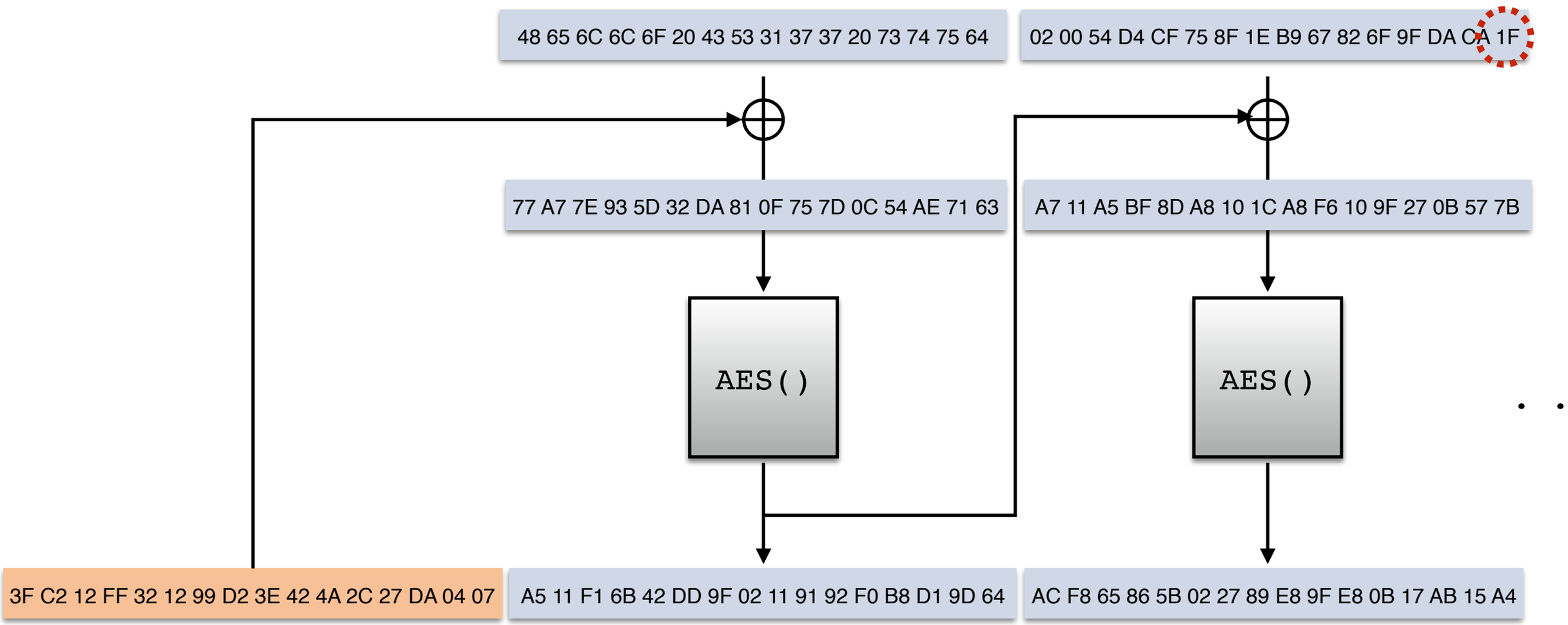

- What can we infer from the padding error response?
  - Last plaintext byte of that block could not have been 0x01.

Initial goal: Learn last byte of a block.

- What will padding oracle say?
  - (still) `Padding_Error`!

After decryption, this byte becomes 0x1E.

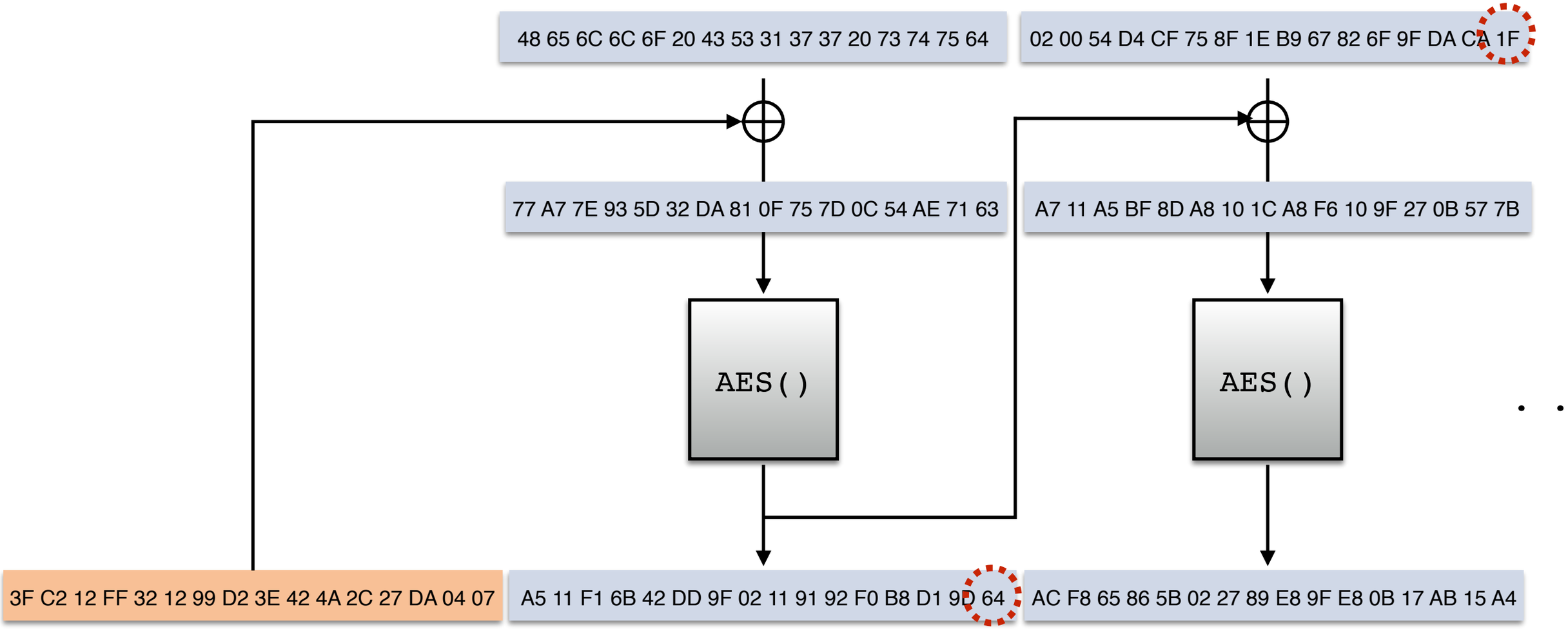

Consider XORing this byte with 01, then submitting ciphertext to oracle.

Initial goal: Learn last byte of a block.

- What will padding oracle say?
  - Padding is valid!
  - Infer value of last byte:
    64⊕7A⊕(last-byte) = 0x01, so last-byte=1F

After decryption, this byte becomes 0x01.

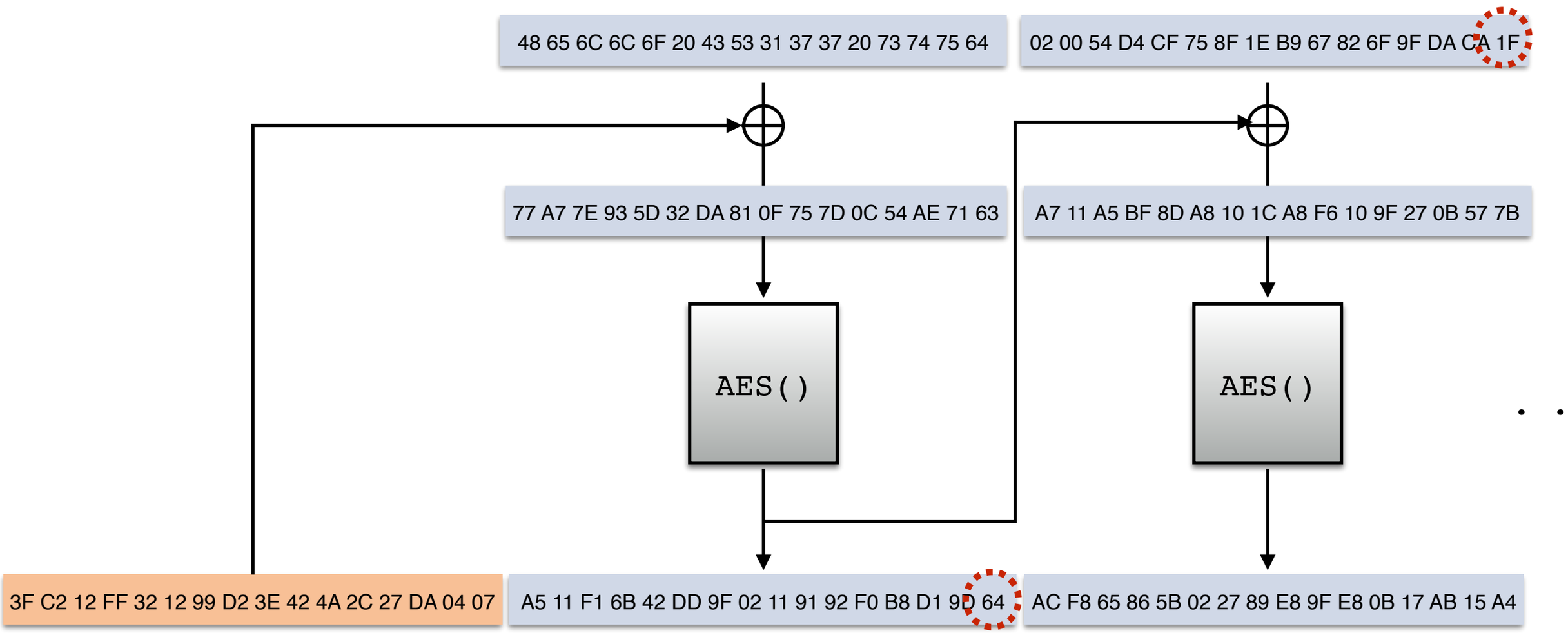

Consider instead xoring this byte with 0x7A, then submitting ciphertext to oracle.

Initial goal: Learn last byte of a block.

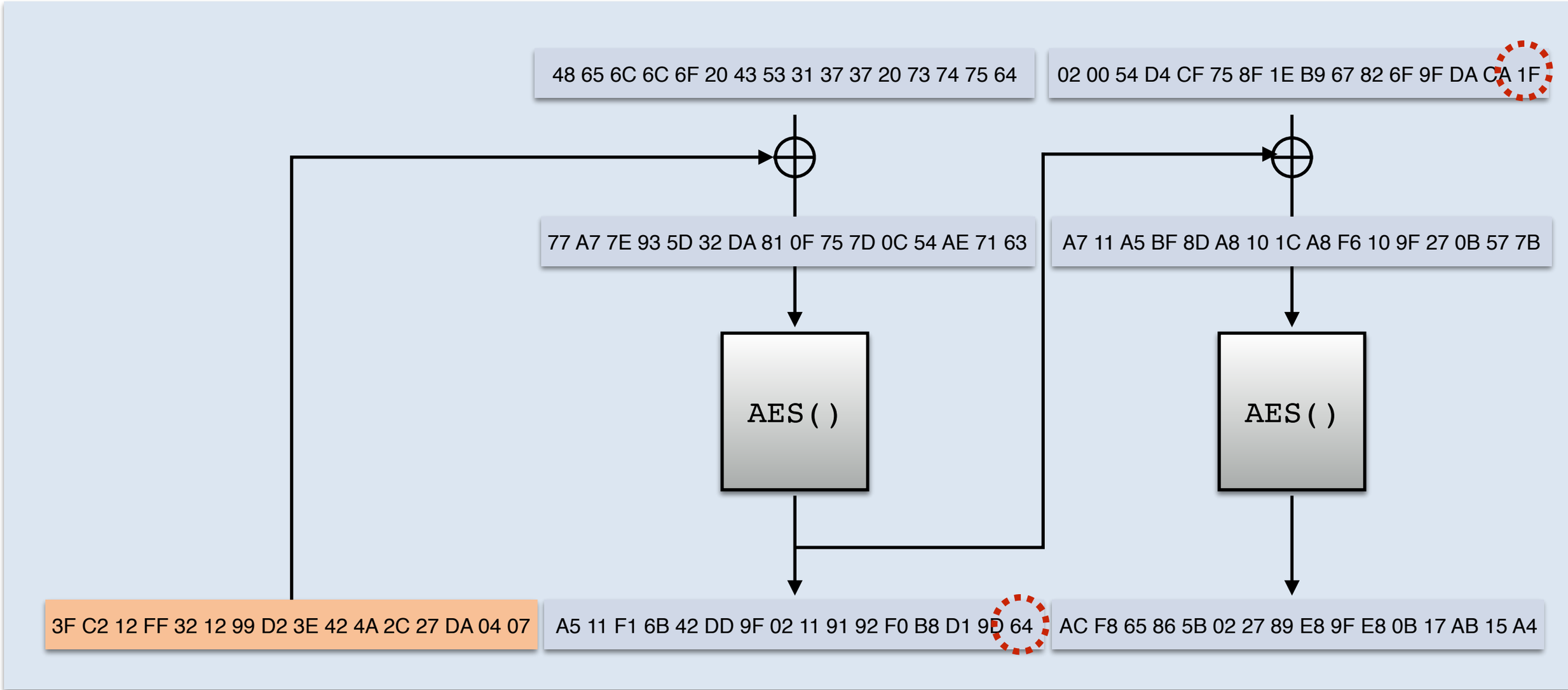

Upshot: If last byte of plaintext is `x`, and we change last byte of prior ciphertext block to `x`⊕`0x01`, then padding will be valid. Changing that byte to anything else will usually result in invalid padding.

Q: But how do we should we set that byte?

A: Just try all 256 until one works.

Recovering more plaintext bytes

- Assume we know last byte is 1F.
- Eventually get valid padding with 02 bytes!
- Guess plaintext byte as before.
- Get all 16 bytes, move on to next block

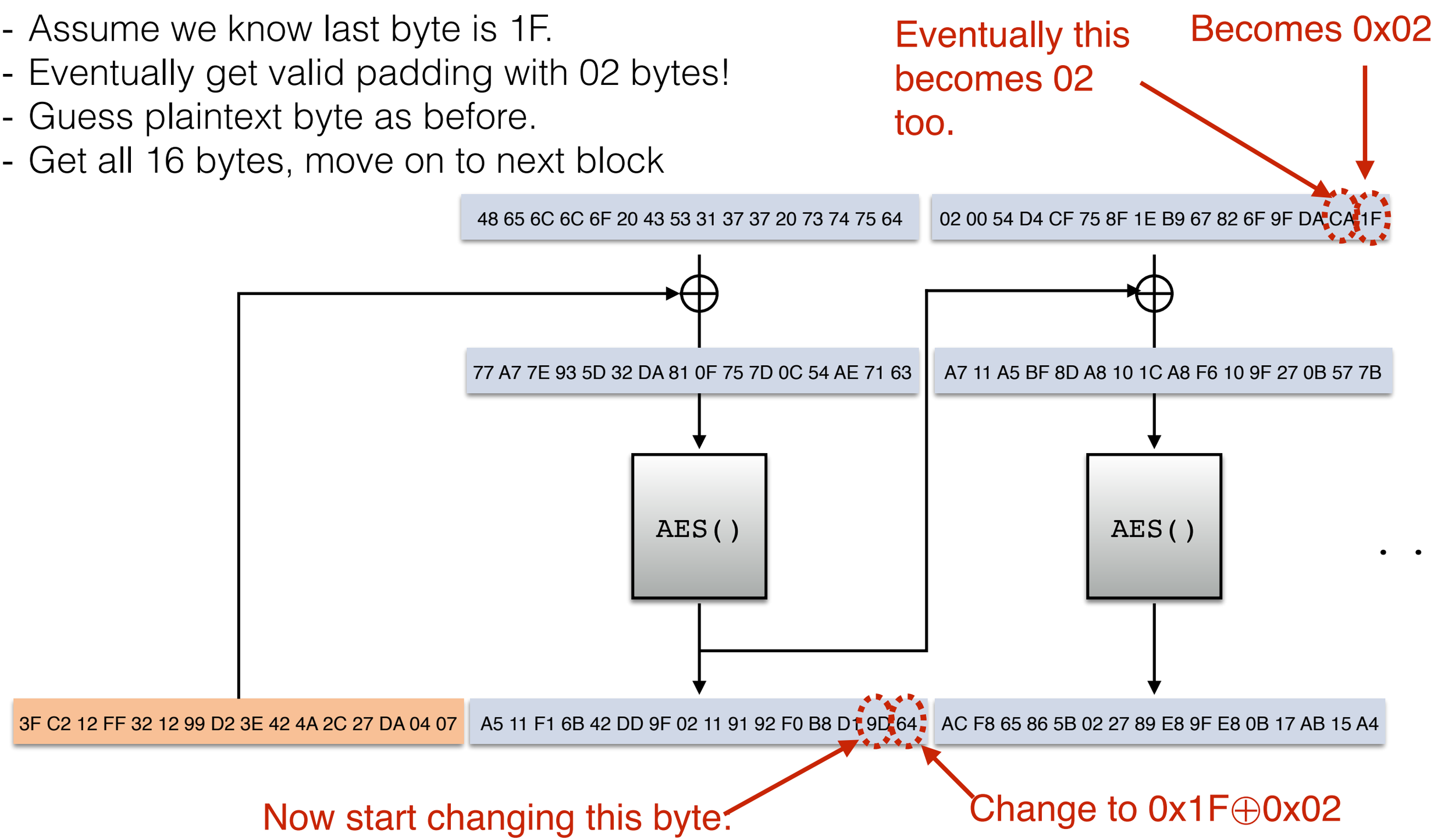

The End